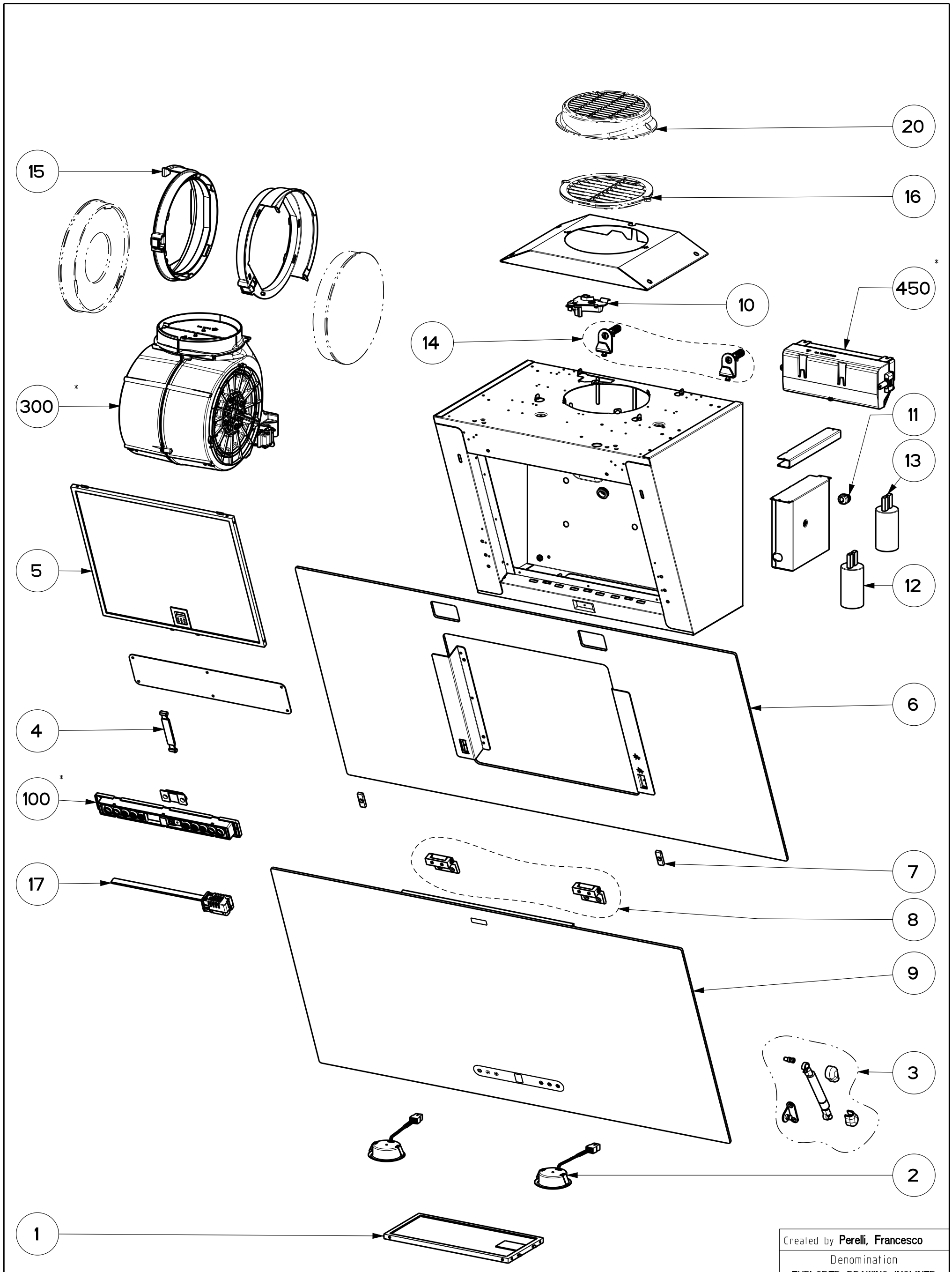

Created by	Perelli, Francesco
Denomination	EXPLODED DRAWING INCLINED
Rif.	
Modif.by	
Approved by	Romani, Fabio
Approval date	12-May-2020
Doc. status	Released
Drawing N. 47A_1126	Rev 02