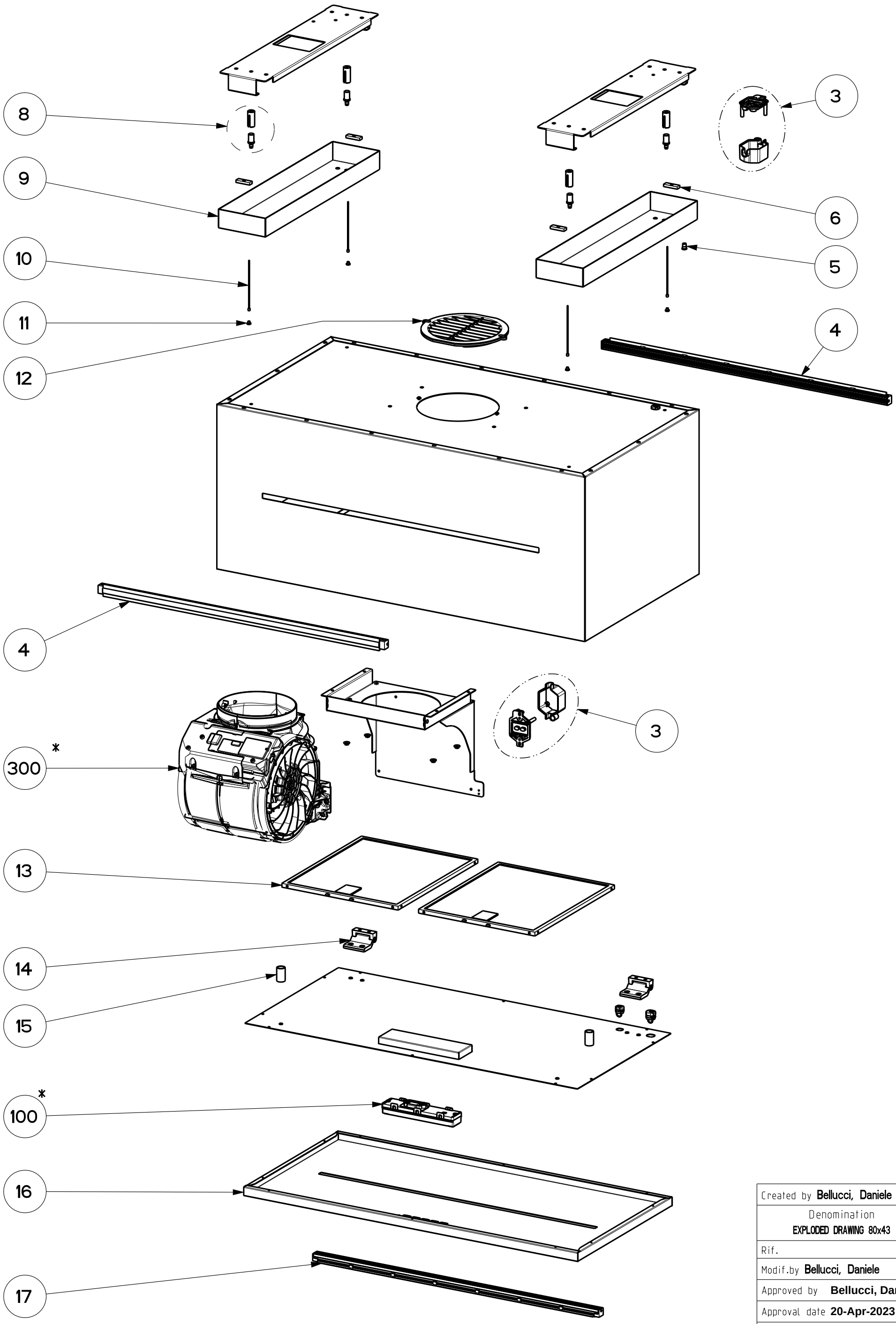

Created by **Bellucci, Daniele**	
Denomination **EXPLODED DRAWING 80x43**	
Rif.	
Modif.by **Bellucci, Daniele**	
Approved by **Bellucci, Daniele**	
Approval date **20-Apr-2023**	
Doc. status **Released**	
Drawing N. 321015_757	Rev 01