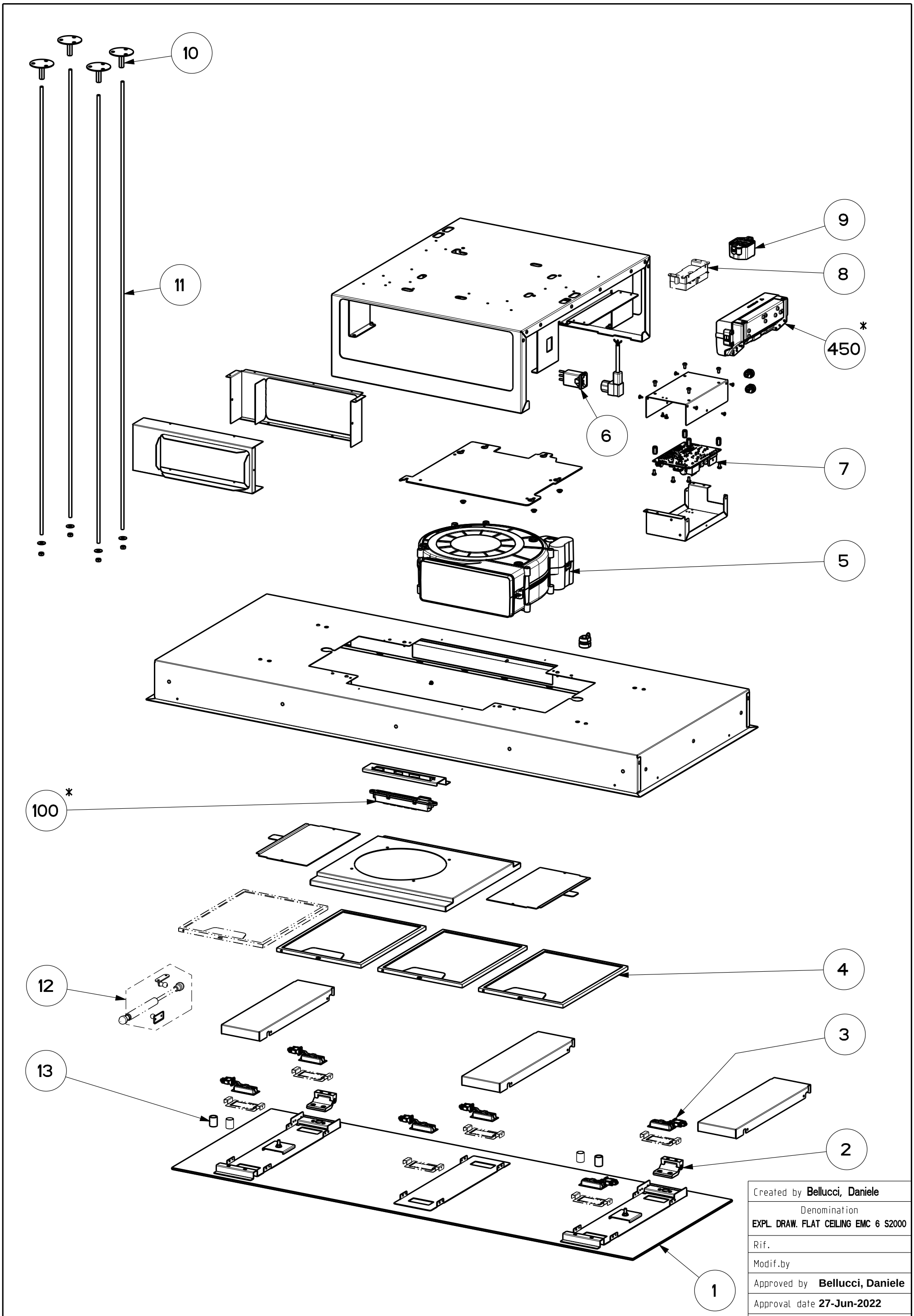

Created by **Bellucci, Daniele**	
Denomination **EXPL. DRAW. FLAT CEILING EMC 6 S2000**	
Rif.	
Modif.by	
Approved by **Bellucci, Daniele**	
Approval date **27-Jun-2022**	
Doc. status **Released**	
Drawing N. 59A_1138	Rev 01