FRANKE

ACTIVE-PLUS
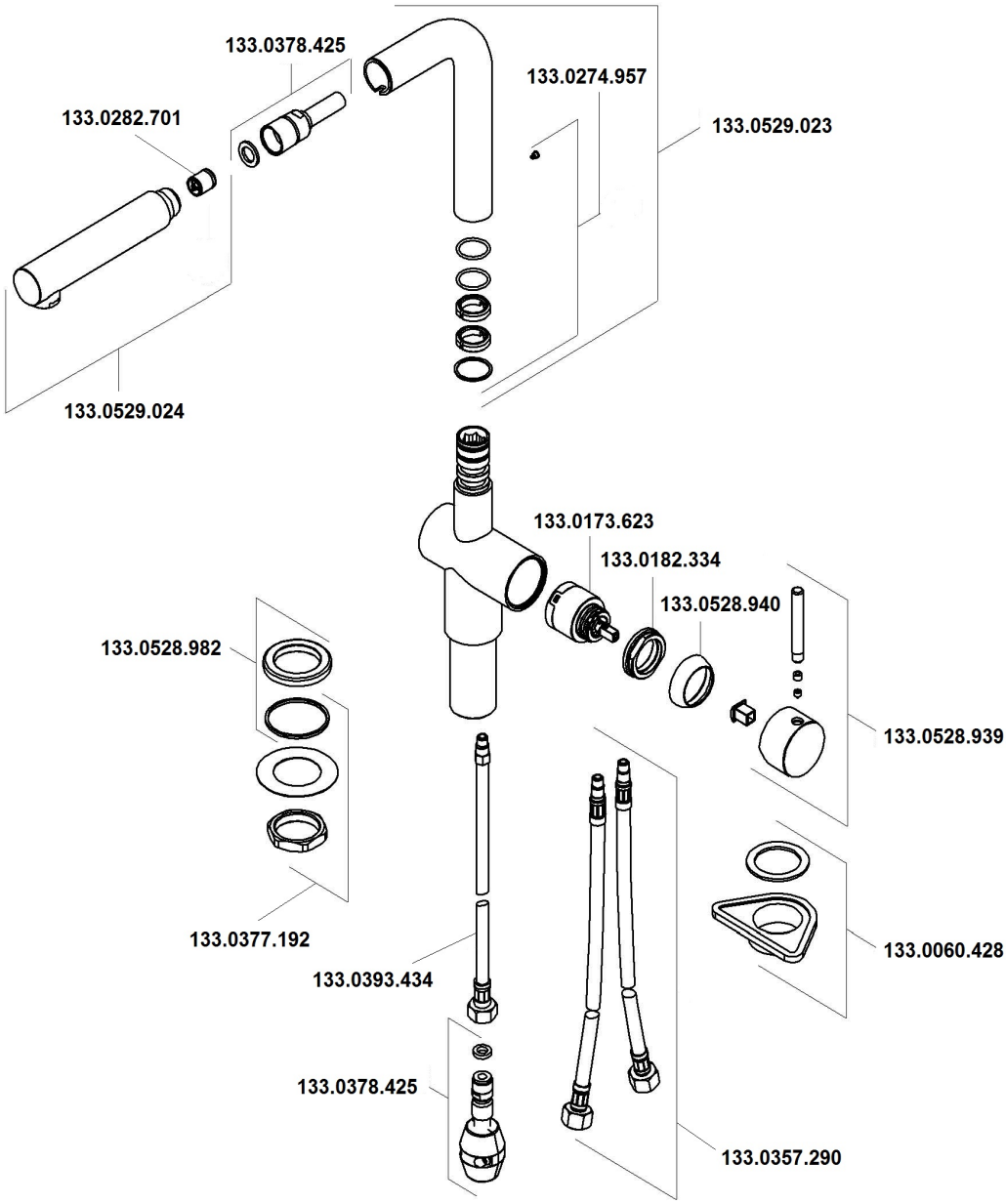
115.0524.931