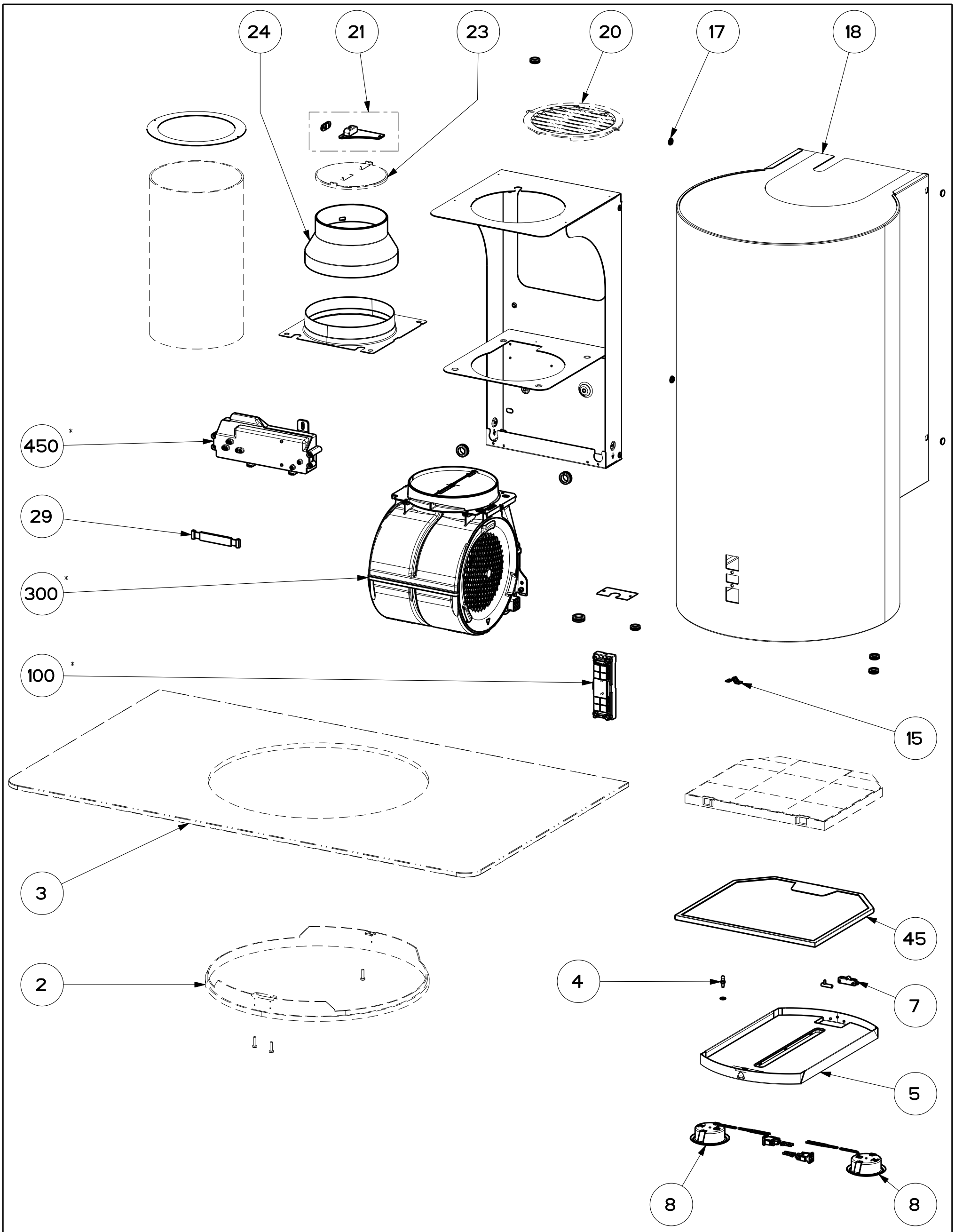

Created by **Perelli, Francesco**	
Denomination **A90_730**	
Rif.	
Modif.by **Perelli, Francesco**	
Approved by **Bellucci, Daniele**	
Approval date **07-Apr-2015**	
Doc. status **Released**	
Drawing N. **A90_733**	Rev **05**