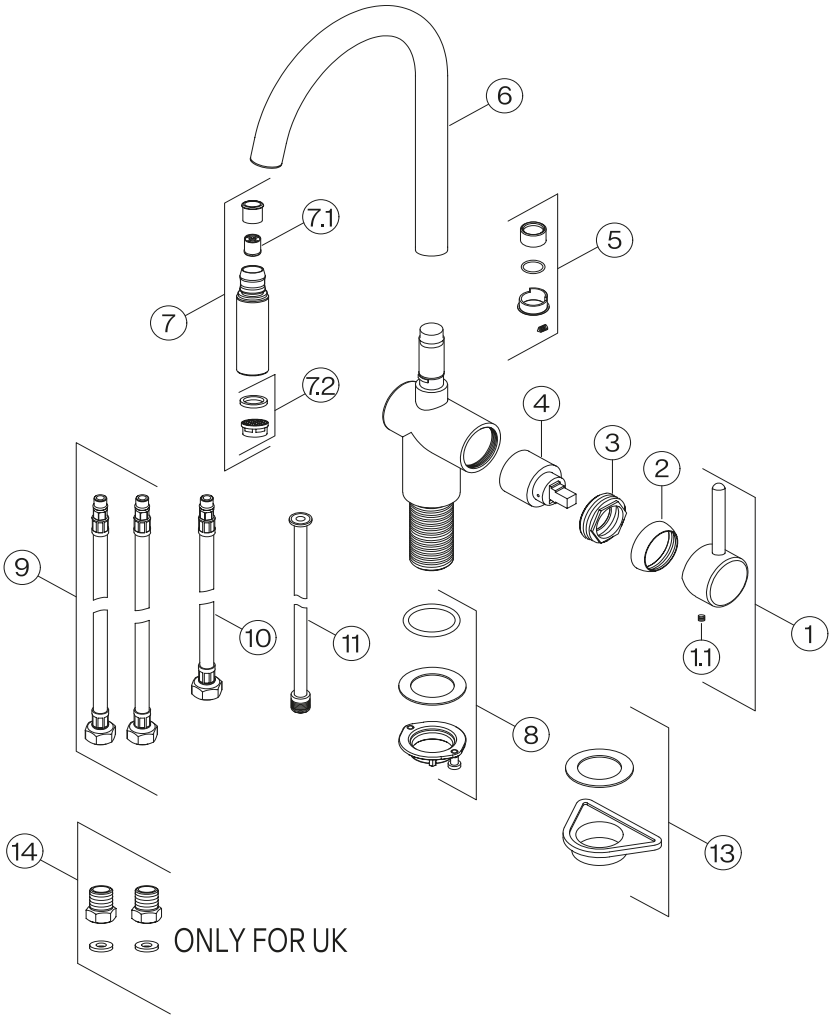

Tap Leda Neo Pull Down Nozzle Side HP SS **115.0590.047**

N.	FUN
1	133.0599.704
1.1	133.0567.704
2	133.0499.710
3	133.0499.709
4	133.0464.738
5	133.0560.582
6	133.0599.706
7	133.0599.707
7.1	133.0599.708
7.2	133.0599.709

N.	FUN
8	133.0560.574
9	133.0438.195
10	133.0474.795
11	133.0599.703
13	133.0560.573
14	133.0544.484

Last document validation date:
25.07.2024